PRAGUE

PRIVACY DOOR LOCK

Installation & Owner's Guide

Read this guide before you begin.

FINISHES IN THIS GUIDE

PRA-DL-C	Chrome
PRA-DL-MB	Matte Black
PRA-DL-BN	Brushed Nickel
PRA-DL-GM	Brushed Gunmetal
PRA-DL-AB	Antique Brass
PRA-DL-BB	Brushed Brass

IVM-MAN-PRA-NZ-01
Revision A · October 2026 · New Zealand edition

Safety and compliance

Read this page in full before you begin. Share it with your installer.

Before you begin

Unpack the hardware and check it for damage and missing parts. Confirm this is the model and finish you ordered.

Check the door

Check the door is between **30 and 42 mm** thick.

Mark carefully

Mark the holes from the dimensions on page 03 before you drill.

Your Prague

A privacy lock with a turn on the inside, for bathroom and toilet doors. All dimensions in millimetres.

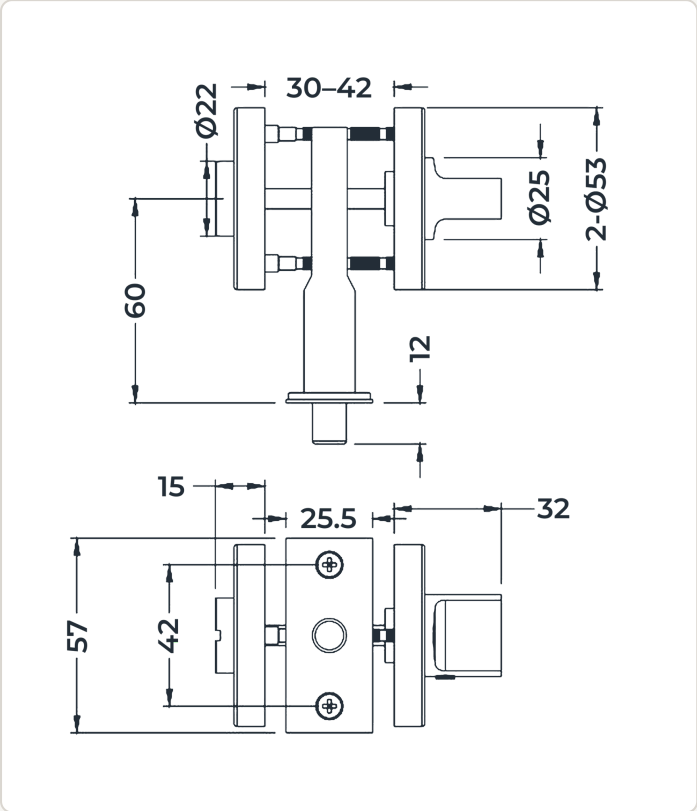

SPECIFICATION

Door thickness	30–42 mm
Backset	60 mm
Turn	Ø22 mm
Body	304 stainless steel

INSTALLATION DATA

Door thickness	30–42 mm
Backset	60 mm
Screw holes	2 × Ø4.5–6.5 mm

Installation

The steps follow the manufacturer's method.

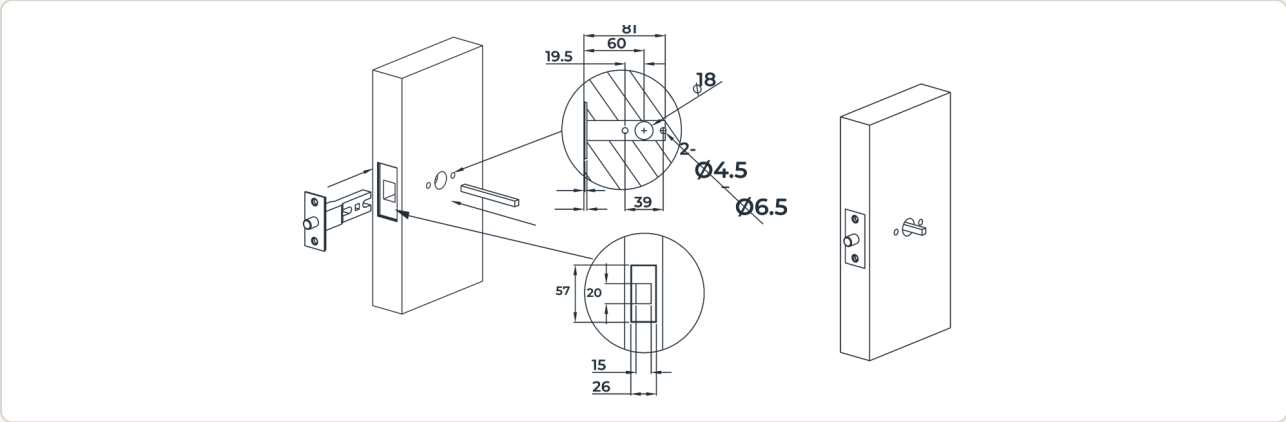

1 Drill the door

Drill the door to the lock dimensions. Fit the lock body, then pass the square shaft through it.

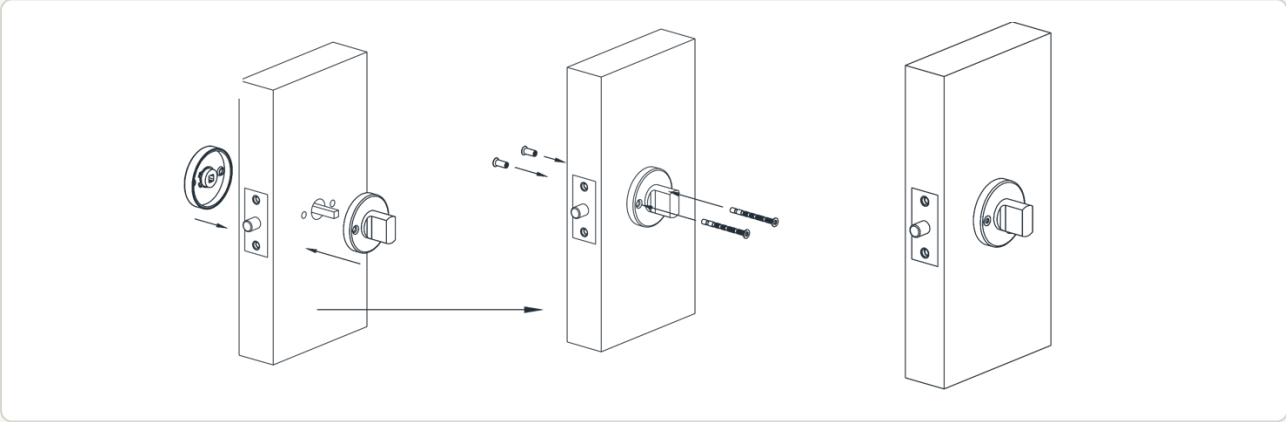

2 Fit the turns

Fit the inner and outer turns onto the square shaft and tighten the screws and nuts.

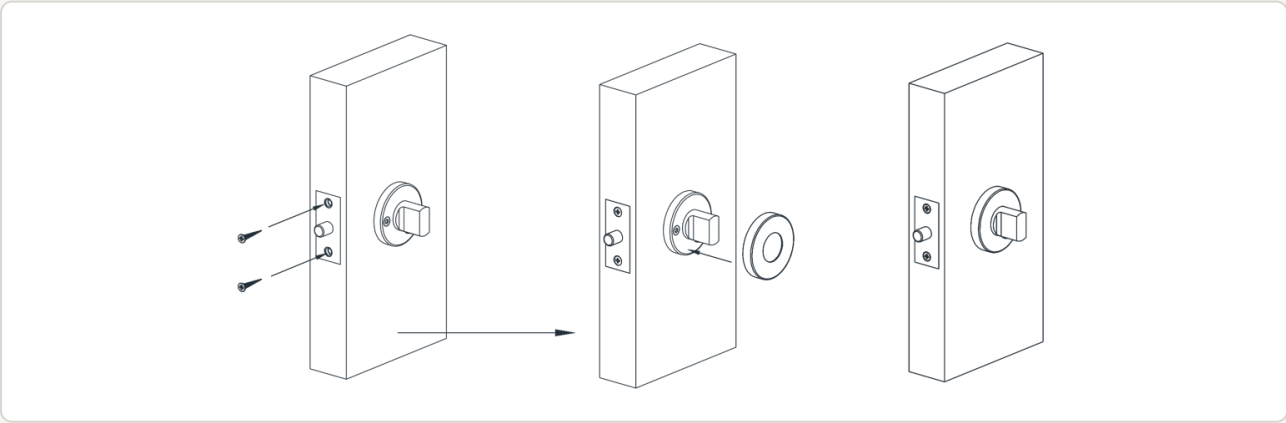

3 Finish

Tighten the screws of the set, then fit the decorative covers.

Caring for your Prague

Cleaning

Clean with warm soapy water and a **soft cloth** only. Rinse and dry to keep the finish looking its best.

Never use

Cleaners containing acids (including vinegar), chlorine or caustic soda, abrasive powders, scourers or brushes. They damage the finish and are not covered by the warranty.

TROUBLESHOOTING

The handle feels loose	Re-tighten the screws through the roses.

Still not right? Email us with your order number (page 06).

Warranty and support

Your Prague Privacy Lock is covered against defects in materials and workmanship. The full warranty terms are at **invoguemirrors.co.nz/pages/warranty**.

In addition to your rights under the Consumer Guarantees Act 1993.

QUESTIONS OR A CLAIM

Email us with your order number and a photo of the issue.
info@invoguemirrors.co.nz
Full warranty terms:
invoguemirrors.co.nz/pages/warranty

YOUR RECORD

Finish and product code	
Date purchased	
Order number	
Installed by	
Installation date	