SPECIFICATION SHEET

RHODES

SHOWER GLASS CLAMP

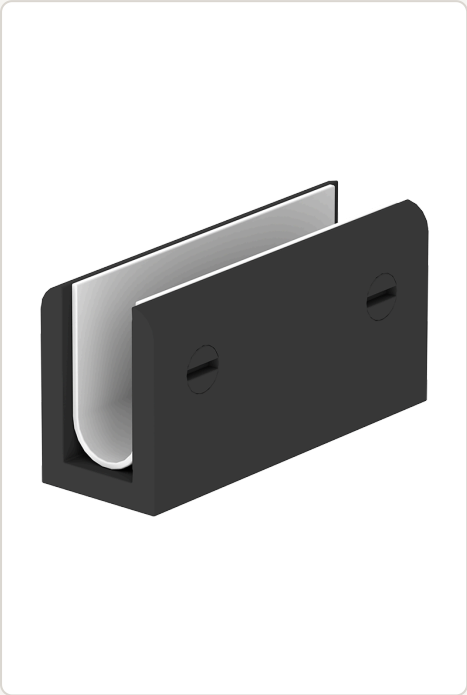

Glass	8–12 mm toughened glass
Type	Glass clamp
Size	60 × 29.5 × 20.5 mm
Body	304 stainless steel

FINISHES AND PRODUCT CODES

Chrome
RHO-GC-C

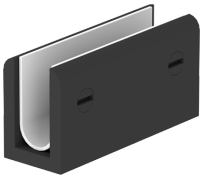

Matte Black
RHO-GC-MB

Brushed Nickel
RHO-GC-BN

Brushed Gunmetal
RHO-GC-GM

Antique Brass
RHO-GC-AB

Brushed Brass
RHO-GC-BB

Dimensions

All dimensions in millimetres. Drawn from the manufacturer's production drawing.

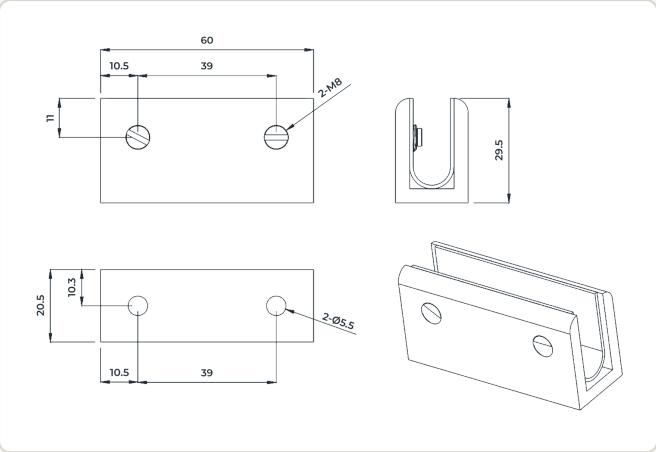

INSTALLATION DATA

Mounting	Wall to fixed glass panel
Glass	8–12 mm toughened, flat or curved
Fixing	2 × M8 at 39 mm centres
Wall holes	2 × Ø5.5 mm
Installation	Qualified, experienced installer

WARRANTY

Your Rhodes Shower Glass Clamp is covered against defects in materials and workmanship. The full warranty terms are at **invoguemirrors.co.nz/pages/warranty**.

In addition to your rights under the Consumer Guarantees Act 1993.

BEFORE YOU INSTALL

Install only on 8–12 mm toughened glass, by a qualified, experienced installer. The installation guide for this product is on the product page.

invoguemirrors.co.nz · info@invoguemirrors.co.nz