SPECIFICATION SHEET

SANTORINI

DOOR HANDLE

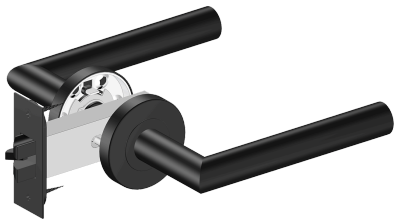

Door thickness	30–42 mm
Backset	60 mm
Roses	Ø53.5 mm
Lever	Ø19 mm
Body	304 stainless steel

FINISHES AND PRODUCT CODES

Chrome
SAN-DH-C

Matte Black
SAN-DH-MB

Brushed Nickel
SAN-DH-BN

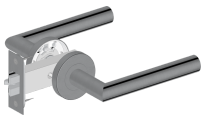

Brushed Gunmetal
SAN-DH-GM

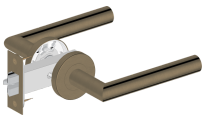

Antique Brass
SAN-DH-AB

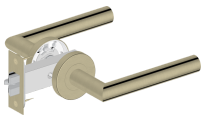

Brushed Brass
SAN-DH-BB

Dimensions

All dimensions in millimetres. Drawn from the manufacturer's production drawing.

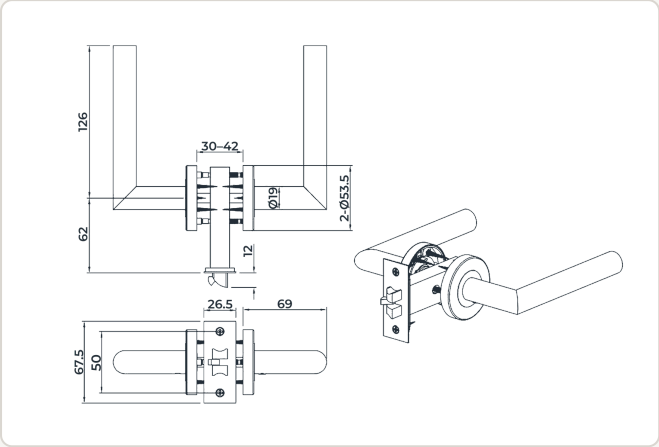

INSTALLATION DATA

Door thickness	30–42 mm
Backset	60 mm
Screw holes	2 × Ø4.5–6.5 mm
Note	Square shaft groove faces down

WARRANTY

Your Santorini Door Handle is covered against defects in materials and workmanship. The full warranty terms are at **invoguemirrors.co.nz/pages/warranty**.

In addition to your rights under the Consumer Guarantees Act 1993.

BEFORE YOU INSTALL

Check the door is 30–42 mm thick before you drill. The installation guide for this product is on the product page.

invoguemirrors.co.nz · info@invoguemirrors.co.nz